CANTO 700 msd/msr MK2

■ 10707180 230V *Black* □ 10707181 230V *White* K10707180 230V *Kit*
■ 11707180 120V *Black* □ 11707181 120V *White* K11707180 120V *Kit*

ACCESSORIES

20100106
colour frame

20100707
iris diaphragm

20100807
gobo-holder, A/B size

20105106
5-col. colour changer, black

20105106B
5-col. colour changer, white

20102200
28mm dia spigot

20102401
black followspot tripod

20102402
chrome-plated followspot tripod

20102900
stirrup-kit for suspension

20107080
flight-case with braking wheels

20107070
kit one-hand control iris+dowser

20109106
kit col.frame + front runners Canto 120V

For more power at middle-distance throw this 700W MSD or MSR-powered discharge followspot is the obvious choice. It features a large, user-friendly side handle, strong mechanics and excellent optics. Standard delivery includes an external ballast, iris, mechanical dimmer, spigot, colour frame and 2m mains cable.

Seguipersona a doppio condensatore ottico per lampade a scarica 700 MSD o MSR. Eccellente resa ottica per uso intenso su medie distanze.
Viene fornito di serie completo di unità ballast esterna, diaframma ad iride, dimmer meccanico, perno per stativo, telaio porta-gelatina e 2m cavo di alimentazione.

PRODUCT SPECS

optical system
double condenser + zoom

reflector
68mm dia. glass

microswitch
double-pole

ballast
external, PFC

colour frame
185x185mm

throw
10-35m

beam angle
8°-22°

voltage
230V and 120V

weight
19,8kg - ballast 16,5/28 (120V)

COMPATIBLE LAMPS

Philips MSR 700/2 **G22** 7200°K 1000hrs
Philips MSD 700 **G22** 6000°K 3000hrs

• LDR recommends Philips lamps

SPECIALS

CANTO 700 KIT includes	**comprende**
followspot	seguipersona
colour changer	cambia colori
black tripod	stativo nero
MSR 700/2 lamp	lampada MSR 700/2
flight case	flight case

PHOTOMETRIC DATA — 700 MSD
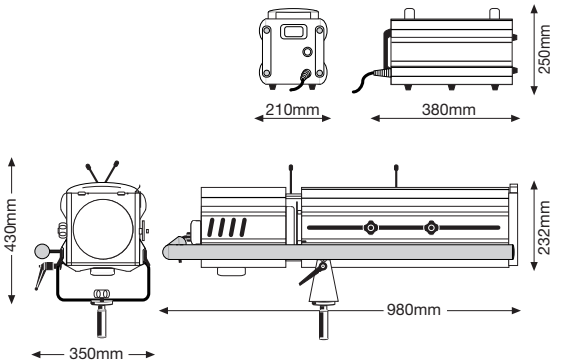
NARROW	m ø	1,9	2,1	2,3	2,5	2,7	2,9	3,1	3,3	3,6
	lux	3.507	2.841	2.348	1.973	1.681	1.449	1.263	1.110	983
	m →	18	20	22	24	26	28	30	32	34
WIDE	m ø	2,6	3,2	3,7	4,2	4,7	5,3	5,8	6,3	6,8
	lux	2.727	1.894	1.391	1.065	842	682	563	473	403
	m →	10	12	14	16	18	20	22	24	26