CANTO 1200 msd/msr MK2

■ 10857180 230V *Black*	□ 10857181 230V *White*	K10857180 230V *Kit*
■ 11857180 120V *Black*	□ 11857181 120V *White*	K11857180 120V *Kit*
■ 10857280 250V *Black*	□ 10857281 250V *White*	K10857280 250V *Kit*
■ 11857280 100V *Black*	□ 11857281 100V *White*	K11857280 100V *Kit*

ACCESSORIES

20100106
colour frame

20100707
iris diaphragm

20100807
gobo-holder, A/B size

20105106
5-col. colour changer, black

20105106B
5-col. colour changer, white

20102200
28mm dia spigot

20102401
black followspot tripod

20102402
chrome-plated followspot tripod

20102900
stirrup-kit for suspension

20107080
flight-case with braking wheels

20107070
kit one-hand control iris+dowser

20109106
kit col.frame + front runners Canto 120V

The most popular in the range, Canto 1200 MSD/MSR produces a well-defined, flat-field projection, ideal for use in medium- large-scale venues. It features a large, user-friendly side handle, strong mechanics and excellent optics. Standard delivery includes an external ballast, iris, mechanical dimmer, spigot, colour frame and 2m mains cable.

Il best-seller della gamma, Canto 1200 MSD/MSR produce un fascio di luce estremamente preciso, che lo rende perfetto per uso in proiezioni sulla media-lunga distanza.
Viene fornito di serie completo di unità ballast esterna, diaframma ad iride, dimmer meccanico, perno per stativo, telaio porta-gelatina e 2m cavo di alimentazione.

PRODUCT SPECS

lens type
double condenser + zoom

reflector
68mm dia. glass

microswitch
double-pole

ballast
external, PFC

colour frame
185x185mm

throw
10-40m

beam angle
8°-22°

voltage
100V/120V/230V/250V

weight
19,8kg - ballast 16,5/28 (120V)

COMPATIBLE LAMPS

Philips MSR 1200	G22 5900°K 800hrs
Philips MSR 1200/2	G22 7200°K 800hrs
Philips MSD 1200	G22 6000°K 3000hrs

• LDR recommends Philips lamps

SPECIALS

CANTO 1200 KIT

includes	**comprende**
followspot	seguipersona
colour changer	cambia colori
black tripod	stativo nero
MSR 1200 lamp	lampada MSR 1200
flight case	flight case

PHOTOMETRIC DATA — 1200 MSD
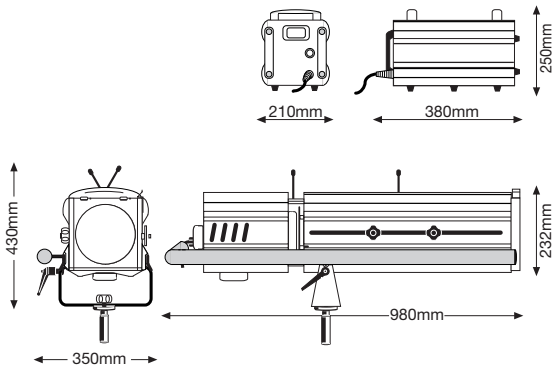
NARROW	m ø	2,5	2,7	2,9	3,1	3,3	3,6	3,8	4,0	4,2
	lux	3.863	3.291	2.838	2.472	2.173	1.925	1.717	1.541	1.391
	m →	24	26	28	30	32	34	36	38	40
WIDE	m ø	2,6	3,7	3,7	4,2	4,7	5,3	5,8	6,3	6,8
	lux	5.563	3.863	2.838	2.173	1.717	1.391	1.149	966	823
	m →	10	12	14	16	18	20	22	24	26