cod. 302D

Lupo

Made in Italy

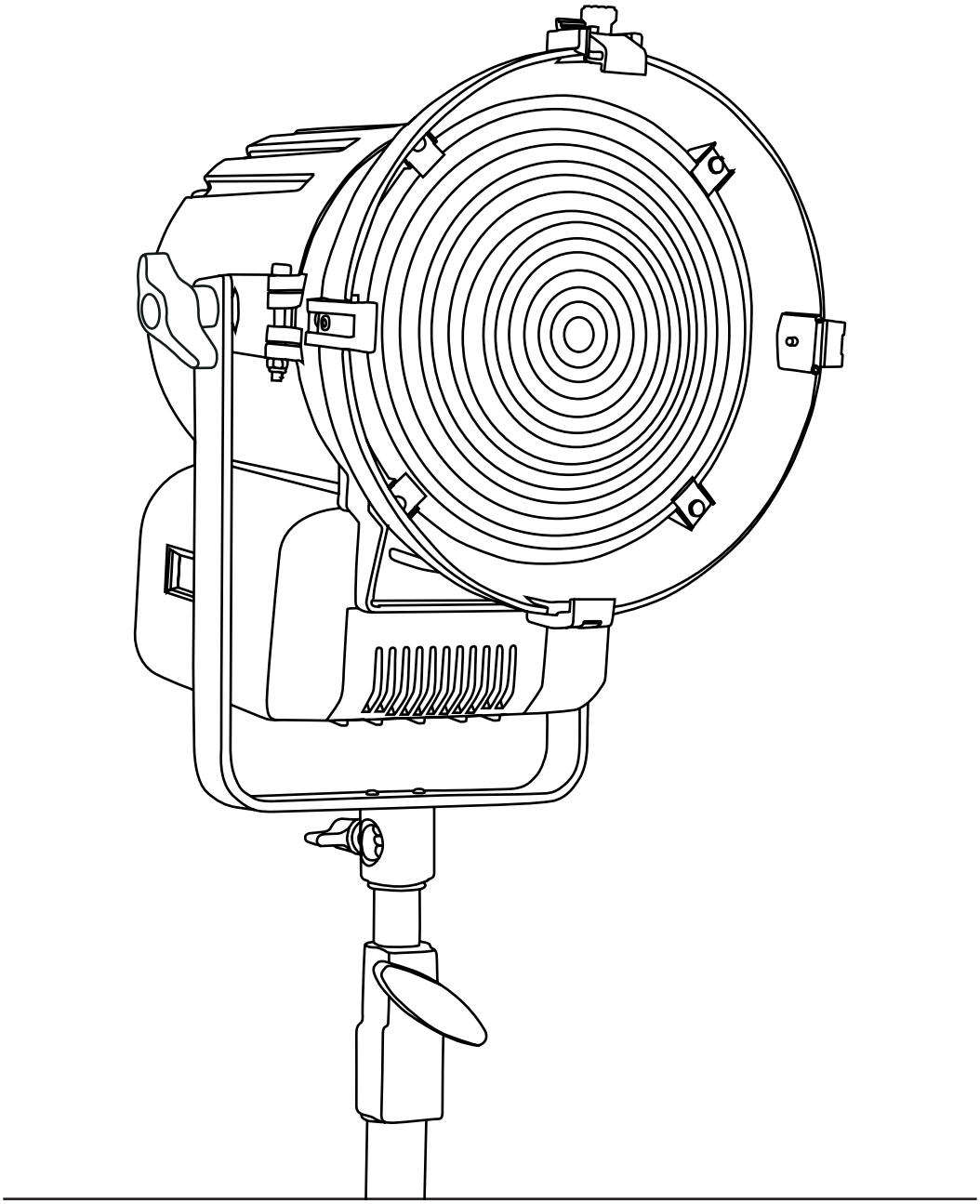

# DAYLED 2000

# 5600 K

Technical Data

Lupo

Made in Italy

## Technical features

| | |
|---|---|
| Dimensions | 30 cm x 26 cm x 25 cm |
| Weight | 4.8 kg |
| CRI (Colour Rendering Index) | > 97 |
| LED COB | 220 W |
| Dimmer 0 – 100 | included |
| Dimming curves mode | Linear, Exponential, Logarithmic |
| Connection for battery (28 V - 29.6 V) with standard XLR 3 pin connector | included |
| Standard XLR 5 pin connectors to DMX console | included |
| Watt consumption | 220 W |
| Watt output (equivalent to tungsten) | 2000 W |
| Fresnel lens | 200 mm |
| Colour temperature | daylight balanced |
| Voltage AC | 90 V – 240 V |
| Light beam | 10° – 60° |
| Frequency (input) | 50/60 Hz |
| Compliance | CE |

## Photometric data

| Distance | spot | flood |
|---|---|---|
| Lux at 1 m | 90000 | 17000 |
| Lux at 2 m | 21700 | 4200 |
| Lux at 3 m | 10000 | 2180 |
| Lux at 4 m | 5000 | 1100 |
| Lux at 5 m | 3100 | 600 |
| Lux at 9 m | 1150 | 320 |
| Lux at 10 m | 750 | 180 |

FILM
LIGHT
VIDEO
MAKING